The Free Internet Journal
for Organic Chemistry

Paper

Archive for
Organic Chemistry

Arkivoc **2020**, part iii, 0-0
to be inserted by editorial office

Continuous flow synthesis of L-menthyl glyoxylate monohydrate: an important intermediate in the manufacture of antiretrovirals

McQuillan Moyo, Cloudius R. Sagandira, and Paul Watts*

Nelson Mandela University, University Way, Port Elizabeth, 6031, South Africa.
Email: Paul.Watts@mandela.ac.za

Received 04-20-2020 **Accepted** 07-31-2020 **Published on line** 08-08-2020

Abstract

L-Menthyl glyoxylate monohydrate (LMGH) is an important pharmaceutical intermediate in the synthesis of lamivudine and emtricitabine. Conventionally, the synthesis of this intermediate has been done in batch. The present work demonstrates various continuous flow synthetic procedures towards LMGH in up to 78% yield and 92% selectivity with residence time of five minutes or less.

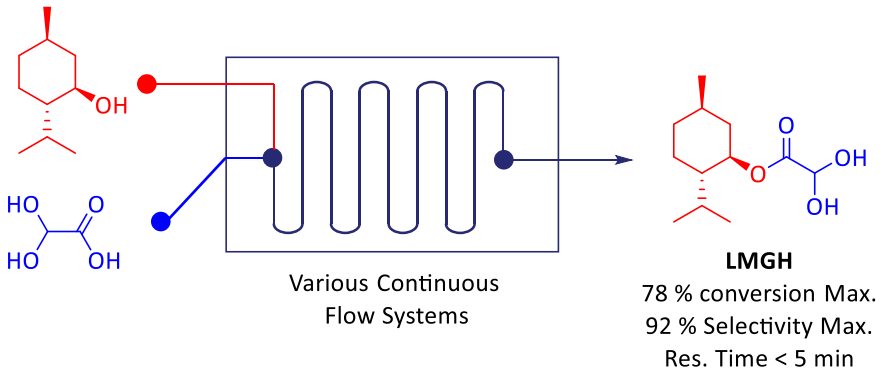

Keywords: Continuous flow synthesis, emtricitabine, lamivudine, L-menthyl glyoxylate monohydrate (LMGH), selectivity

 ©AUTHOR(S)

Introduction

L-Menthyl glyoxylate monohydrate (LMGH) is an important intermediate in the synthesis of two important antiretroviral drugs, lamivudine and emtricitabine **1** (Figure 1). They are two of the most commonly prescribed drugs that are used in combination therapy and function as cytidine reverse transcriptase inhibitors in the treatment of HIV-1, HIV-2 and Hepatitis B; given that Sub-Saharan Africa is more affected by AIDS than anywhere in the world, these generic drugs are particularly important in these countries.

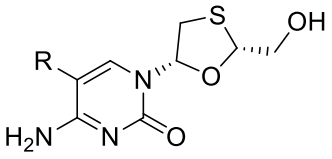

1

Figure 1. Structure of lamivudine (R=H) and emtricitabine (R=F).

One of the biggest factors to the cost of producing the active pharmaceutical ingredients (APIs) of the aforementioned drugs is the cost of producing the key starting material LMGH. Potentially, the cost of producing these drugs may be significantly reduced by the use of more efficient technologies to produce LMGH, such as continuous flow synthesis. In recent years, this technology has emerged as a cost effective alternative compared to batch, due to its well-documented advantages. [1–6] Indeed the group has already completed the synthesis of lamivudine and emtricitabine in flow,[7] where we identified the need to produce the starting LMGH ourselves at lower cost.

Many LMGH batch synthesis procedures have been reported.[8–13] Most of these synthetic routes involve direct esterification, in which L-menthol is reacted with a glyoxylic acid solution in the presence of concentrated sulfuric acid as a catalyst.[9,10,14] Although sulfuric acid is a favoured catalyst for this reaction due to its high catalytic activity, it has many drawbacks such as the high susceptibility of the products to oxidation during the dehydration step, affecting the purity and yield of the desired product.[15] Furthermore, the use of concentrated sulfuric acid is particularly unfavourable in batch reactors, as it tends to corrode equipment and its disposal into the environment causes serious pollution.[15]

Schouteeten[9] prepared LMGH in 77% yield by reacting an aqueous solution of glyoxylic acid (50% by weight) with L-menthol (3 equiv.) in the presence of a catalytic amount of sulfuric acid. The water produced in the reaction was removed by azeotropic distillation with a Dean and Stark apparatus accompanied by many tedious purification steps.[9] Ebeling and Matthies[10] studied the synthesis of (-)-menthyl esters that are important in the synthesis of glycine derivatives and reported a method for the synthesis (-)-menthyl glyoxylate through the (-)-menthyl glycolate intermediate. The formation of the intermediate from L-menthol (1 equiv.) and glycolic acid (1 equiv.) had a low selectivity, thus lowering the yield (60%) of the two-step synthesis.[14] The oxidation step to obtain the desired product gave a yield of 71%. Whitesell and colleagues,[16] in their study of auxiliary alcohols in the synthesis of chiral glyoxylates, reported on the direct esterification of glyoxylic acid (2.5 equiv.) using L-menthol (1 equiv.) giving a low LMGH yield of 45%. Caibo *et al.* developed a method for selective synthesis of LMGH by reacting glyoxylic acid (1 equiv.) with L-menthol (1.5 equiv.) in the presence of a solid acid catalyst in good yield (77-90%) and purity (83%).[15] It can be noted that the use of one of the reagents in excess is necessary for promoting high yields in the esterification reaction. Therefore, since

 ©AUTHOR(S)

L-menthol is significantly more affordable than glyoxylic acid (about 10 times cheaper), we envisaged that its use in excess will lead to a more economical and higher yielding process; furthermore the unreacted L-menthol is easier to recover and recycle than the aqueous glyoxylic acid.

Direct esterification by coupling alcohols and carboxylic acids in the presence of an acid catalyst, commonly known as Fischer esterification, is a fundamental transformation in organic and pharmaceutical chemistry.[17,18] Conventionally, this transformation has been performed in batch. Interestingly, recent literature has demonstrated esterification in continuous flow systems.[3,6,19,20] Unlike in batch, where reaction equilibrium can be shifted towards the desired product by the removal of the water by-product, the reaction rate in flow is often only dependent on temperature, mole equivalents of the reactants and catalyst amount.[9,21–23] Consequently, there are few examples of homogeneous acid catalyzed Fischer esterification in flow owing to high equilibrium constant circumventing challenges.[19,21] Contrary, there are more reports on the continuous Fischer esterification in flow using heterogenous catalysts.[19,21,24–28] Heterogenous catalysts are favoured because of better selectivity, recyclability and more significantly ease of separation from the products.[17,27] In a bid to overcome the reaction equilibrium problem in flow, the use of alternative heating sources such as microwave and introducing an applied voltage or electric field (electroosmotic flow) have been studied.[23,29] Microwave heating has shown considerable success resulting in higher yielding ester synthesis in both batch and flow.[29–34]

Flow chemistry technology is an enabling technology, which has attracted considerable attention in the synthetic chemistry and pharmaceutical industry owing its easy scale-up, safety and reproducibility. The methodology developed in a lab may be directly scaled by using larger volume flow reactors with equal mixing performance; industry is now using the technology up to 2000 tonnes per annum.

LMGH is an important pharmaceutical intermediate. However, the current production procedures are not very efficient due to selectivity issues posed by using glyoxylic acid; a diacid in its hydrated form. Therefore, this study comprehensively investigated whether this can be addressed by use of continuous flow technology. There are many model esterification reactions that have been reported in literature,[19,35–37] however we report a detailed optimisation of glyoxylic acid **2** esterification with the vision of further integration of subsequent steps into the total synthesis of lamivudine and emtricitabine in flow.[38] Furthermore, the final step in the synthesis of both lamivudine and emtricitabine involves cleavage of the menthol from the product; hence the overall vision would be to recycle this within the process.

Results and Discussion

Synthesis of LMGH in a Chemtrix Labtrix® Start continuous flow system. In the first instance, the synthesis of LMGH was optimised in a 19.5 µl Chemtrix glass reactor *via* esterification of L-menthol **2** with glyoxylic acid **3** in the presence of catalytic amount of *p*-toluenesulfonic acid (Figure 2). In our preliminary study, glyoxylic acid **3** (0.5 M) in acetonitrile was reacted with a solution of L-menthol (12 equiv.) in acetonitrile using a 19.5 µL Labtrix SOR-mixer glass reactor at 150 °C and 5 min residence time. The reaction was done in the presence of catalytic amount of *p*-toluenesulfonic acid (0.01 equiv.) which was mixed with glyoxylic acid **3** and pumped separately from L-menthol **2** giving LMGH **4**; this preliminary experimented demonstrated 67% conversion and 30% selectivity.

 ©AUTHOR(S)

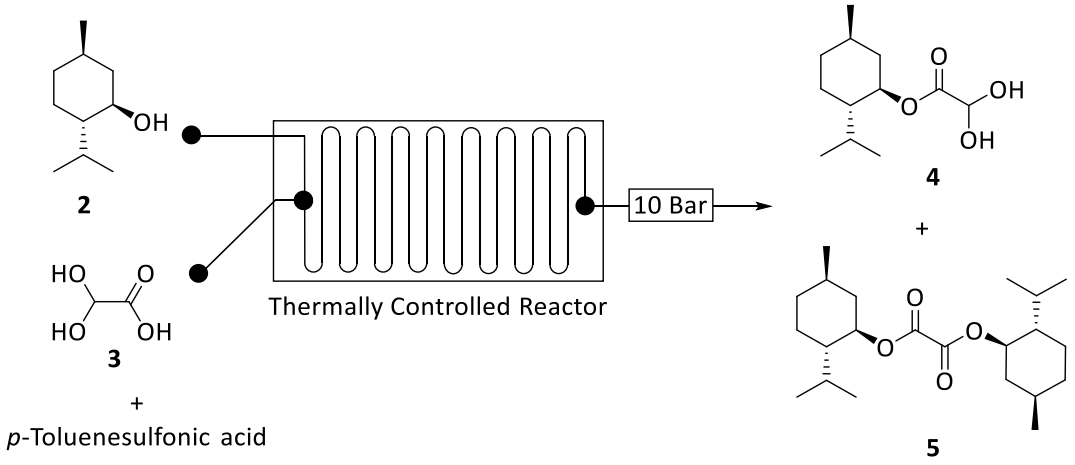

Figure 2. Schematic manifold used for LMGH synthesis and optimisation studies.

With this result in hand, a comprehensive study on the effects of various parameters was conducted, in order to optimise the reaction in a continuous flow system (Figure 2). Table 1 summarises the screening results.

Table 1. Optimisation studies for continuous flow LMGH synthesis

Entry	**2** Equiv.	T (°C)	R_t (min)	Conv.[a] (%)	Sel.[b] (%)
1	4,8	78	4	22	68
2	4,8	78	1,5	14	74
3	4,8	132	4	49	58
4	4,8	132	1,5	27	46
5	10,2	78	4	29	64
6	10,2	78	1,5	25	69
7	10,2	132	4	68	32
8	10,2	132	0,5	49	51
9	7,5	105	5	38	69
10	7,5	60	3	19	76
11	7,5	150	3	62	55
12	12,0	105	3	52	41
13	7,5	105	3	41	78

Feed glyoxylic acid concentration - 0.5 M
[a]Glyoxylic acid conversion by HPLC
[b]LMGH selectivity by HPLC

The reaction was monitored using HPLC fitted with a diode-array detector, at a UV wavelength of 194 nm. An increase in mole equivalents of L-menthol **2** resulted in an increase in the conversion of glyoxylic acid **3** and inversely resulted in a decrease in selectivity towards our desired LMGH ester **4** (Table 1: Entries 1 and 5, 2 and 6, 3 and 7, 12 and 13). This shows that the use an excess of L-menthol **2** improves the glyoxylic acid conversion as expected. Most esterification reactions in literature use simple alcohols (*e.g.* methanol, ethanol *etc*) as both solvent and reactant thus being highly in excess.[19,21,35,39,40] Unfortunately, this excess proved detrimental for LMGH **4** selectivity. This is understandable because glyoxylic acid **3** forms a diacid in its hydrated form, thus

 ©AUTHOR(S)

the excess L-menthol **2** reacts with both sites of the diacid resulting in an unwanted diester **5**. As expected, an increase in temperature increased glyoxylic acid **3** conversion. Contrary, this temperature increase resulted in a decrease in the selectivity of LMGH (Entries 1 and 3, 2 and 4, 5 and 7, 10 and 11, 11 and 13). High temperatures promoted the formation of the unwanted diester **5**. On heating, glyoxylic acid **3** undergoes a disproportionation reaction, thus forming glycolic acid and oxalic acid **7**.[41] The oxalic acid undergoes a double esterification with menthyl electrophile **6**, produced by the hydrolysis reaction of L-menthol **2**, to give the diester **5** (Scheme 1).

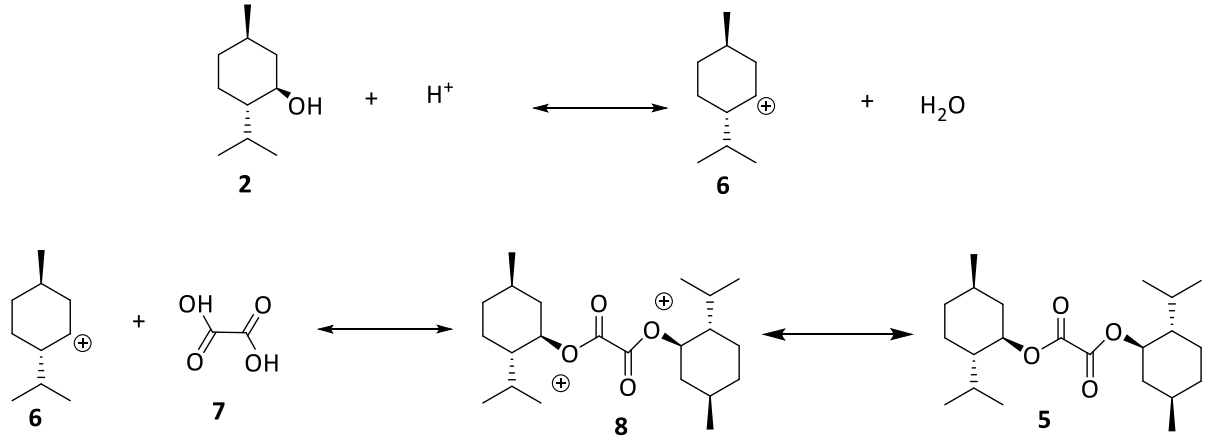

Scheme 1. The formation of oxalic di(1-menthyl) ester.

Increase in residence time increased glyoxylic acid **3** conversion. However, longer residence times promoted the diester formation, thus lowering LMGH **4** selectivity (Table 1: Entries 1 and 2, 5 and 6, 7 and 8, 9 and 13). Generally, from all the above observations, the esterification reaction carried out in Chemtrix Labtrix Start system was found to be highly dependent on temperature, L-menthol **2** equiv. and residence time. It can be concluded that the use of excess of L-menthol **2**, high temperatures and longer residence time improves glyoxylic acid **3** conversion, but conversely led to a drastic decrease in LMGH **4** selectivity. In an effort to achieve a reasonable balance between conversion and selectivity, the optimum glyoxylic acid conversion within the Chemtrix reactor was found to be 51% affording LMGH in 48% selectivity using 6 equiv. L-menthol at 105 °C and 1.2 min residence time.

The low conversions obtained in Labtrix Start system may be attributed to the failure to remove water produced during the reaction. The removal of water from Fischer esterification reactions is known to push the reactions forward.[17,19,35] In an effort to improve the conversion and selectivity of this reaction, we considered the incorporation of a Zaiput in-line liquid-liquid phase separator.[42] Unfortunately, due to the mechanism of separation; it was impossible to remove water from the reaction solvent acetonitrile using the Zaiput liquid-liquid separator, as they are miscible.

Microwave-assisted continuous-flow synthesis of LMGH: The use of microwave irradiation in organic synthesis is a widely reported method for improving the efficiency of esterification reactions.[31,43–46] Since the initial continuous flow glyoxylic acid esterification proved to be only moderate yielding, it was reasonable to investigate whether the reaction efficiency could be improved by using a microwave-assisted continuous flow reactor. The microwave-assisted continuous-flow reactor set-up was used in the study of the reaction (Figure 3). The reactants glyoxylic acid (0.5 M) and L-menthol (3 M, 6 equiv.) both in acetonitrile were pumped into the reactor column packed with 1.0 g of Amberlyst-15 catalyst (Figure 3). In order to more efficiently study the

 ©AUTHOR(S)

effect of reaction parameters, a central composite design (CCD) was used for LMGH synthesis optimisation studies (Table 2). Optimisation studies were carried out by varying temperature and residence time and the CCD experiments; observations are shown in Table 2. Glyoxylic acid conversion (%) and LMGH selectivity (%) were used as the response factors.

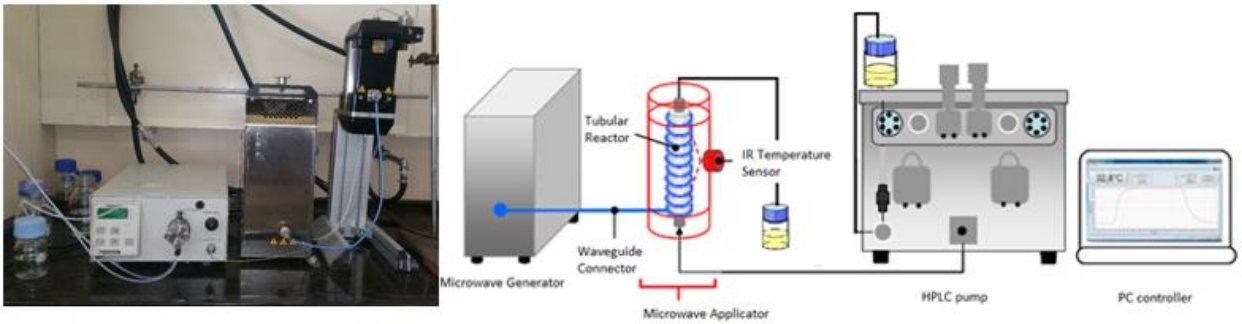

Figure 3. Microwave-assisted continuous-flow reactor/furnace setup for LMGH.

Table 2. Observations of the microwave-assisted continuous flow LMGH synthesis

Experiment	T (°C)	R_t (min)	Conv. (%)	Sel. (%)
1	69	1,2	32	81
2	69	4,3	48	69
3	111	1,2	72	63
4	111	4,3	78	51
5	90	0,5	52	76
6	90	5	68	65
7	60	2,8	31	75
8	120	2,8	81	49
9	90	2,8	57	61
10	90	2,8	58	60
11	90	2,8	57	60
12	90	2,8	58	58

The data in Table 2 was analysed and modelled using Statistica-13 software obtaining profile plots illustrating the effects of temperature and residence time on conversion and selectivity (Figure 4 and 5).

 ©AUTHOR(S)

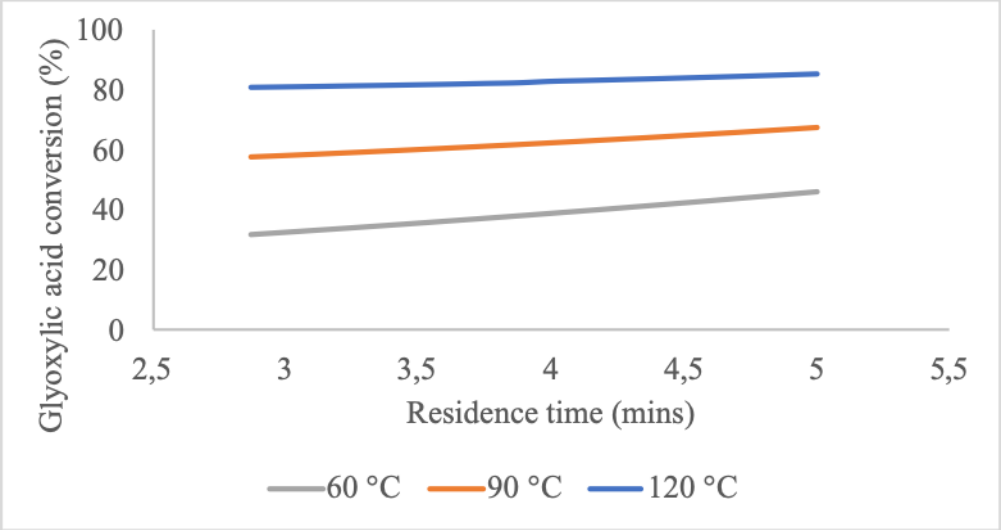

Figure 4. Profile plot on the effect of temperature and residence time on glyoxylic acid conversion.

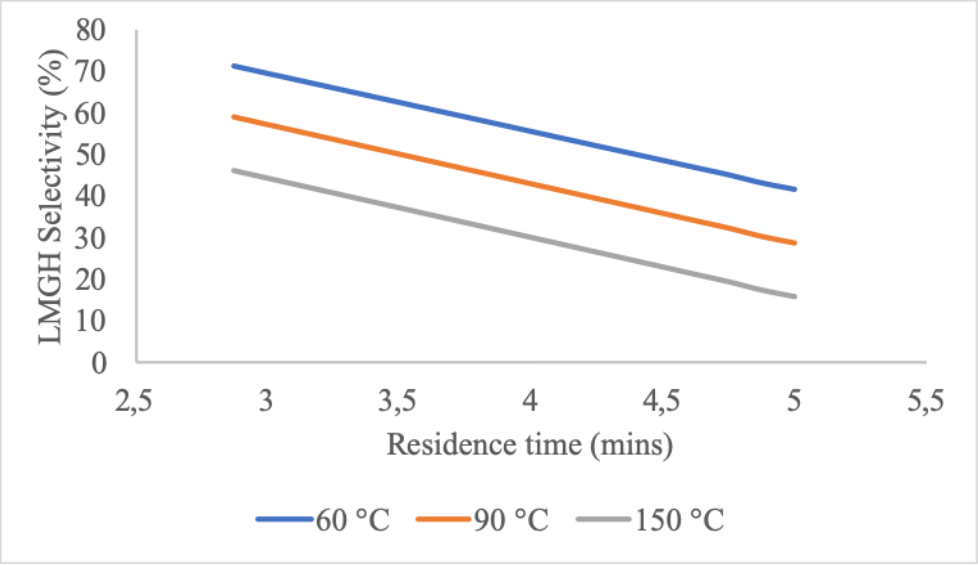

Figure 5. Profile plot on the effect of temperature and residence time on LMGH selectivity.

Temperature and residence time have a direct proportional relationship with the conversion of glyoxylic acid **3**. Therefore, an increase in temperature and residence time favours the glyoxylic acid conversion (Figure 4). Contrary, high temperatures and longer residence times were detrimental for LMGH selectivity (Figure 5). These observations were consistent with the earlier observations in the Chemtrix glass reactor system. Evidently, the use of microwave to enhance the continuous flow esterification of glyoxylic acid with L-menthol **2** was found to have a significant effect on the conversion and selectivity, giving better results than those in Chemtrix system. Activated molecular sieves where loaded together with the Amberlyst-15 catalyst in the column reactor to improve the reaction. The optimum conversion (72%) and selectivity (63%) were achieved at 111 °C and 1.2 min residence with respect to attaining a reasonable balance between glyoxylic acid conversion and LMGH **4** selectivity, microwave-assisted flow esterification was more efficient than the use of a Chemtrix glass reactor.

 ©AUTHOR(S)

LMGH synthesis in a packed-bed reactor: We further investigated whether the use of heterogenous catalysts would improve the glyoxylic acid **3** esterification reaction of L-menthol **2** in flow. An experimental design (CCD) was used to investigate the effect of using a heterogenous catalyst on the glyoxylic acid **3** esterification with L-menthol **2** in a Uniqsis FlowSyn continuous flow system fitted with packed column reactor. This is a bench top microreactor system that is ideal for rapid reaction condition screening and optimisation. The experiments were carried out according to Table 3, where glyoxylic acid **3** (0.5 M) and L-menthol **2** in acetonitrile were pumped separately through a heated Uniqsis FlowSyn flow system fitted with a column reactor packed with Amberlyst-15 (4 g) and activated molecular sieves (2 g) (Figure 6). The molecular sieves absorb any water produced in the reaction and were replaced after every three experimental runs, at which point they were saturated with water. Optimisation studies were done by varying L-menthol **2** equiv., temperature and residence time and the observations are shown in Table 2. Glyoxylic acid **3** conversion (%) and LMGH **4** selectivity (%) were used as the response factors.

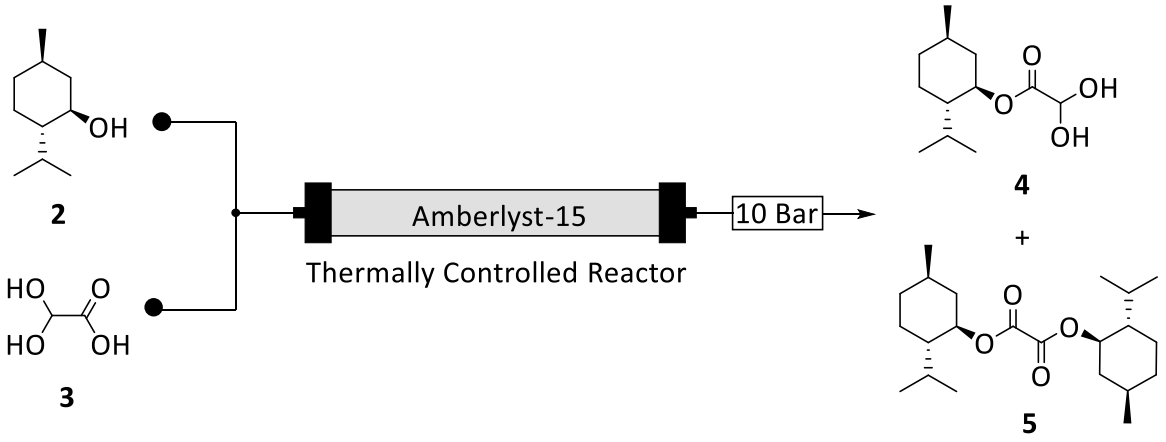

Figure 6. Amberlyst-15 packed column reactor for LMGH flow synthesis and optimisation studies.

 ©AUTHOR(S)

Table 3. Observations flow LMGH synthesis in a FlowSyn packed column

Experiment	**2** Equiv.	T (°C)	R_t (min)	Conv. (%)	Sel. (%)
1	4,8	72	4,1	22	88
2	4,8	72	1,4	30	65
3	4,8	108	4,1	34	71
4	4,8	108	1,4	51	59
5	10,2	72	4,1	29	74
6	10,2	72	1,4	45	47
7	10,2	108	4,1	59	45
8	10,2	108	0,5	78	64
9	7,5	90	5,0	32	92
10	7,5	90	2,8	64	48
11	7,5	60	2,8	27	89
12	7,5	120	2,8	62	68
13	3,0	90	2,8	35	78
14	12,0	90	2,8	68	54
15	7,50	90	2,8	53	75
16	7,50	90	2,8	52	70
17	7,50	90	2,8	52	71
18	7,50	90	2,8	51	74
19	7,50	90	2,8	50	73
20	7,50	90	2,8	52	71

Table 3 data was analysed and modelled using Statistica-13 software obtaining profile plots illustrating the effects of temperature and residence time on conversion and selectivity (Figure 7 and 8).

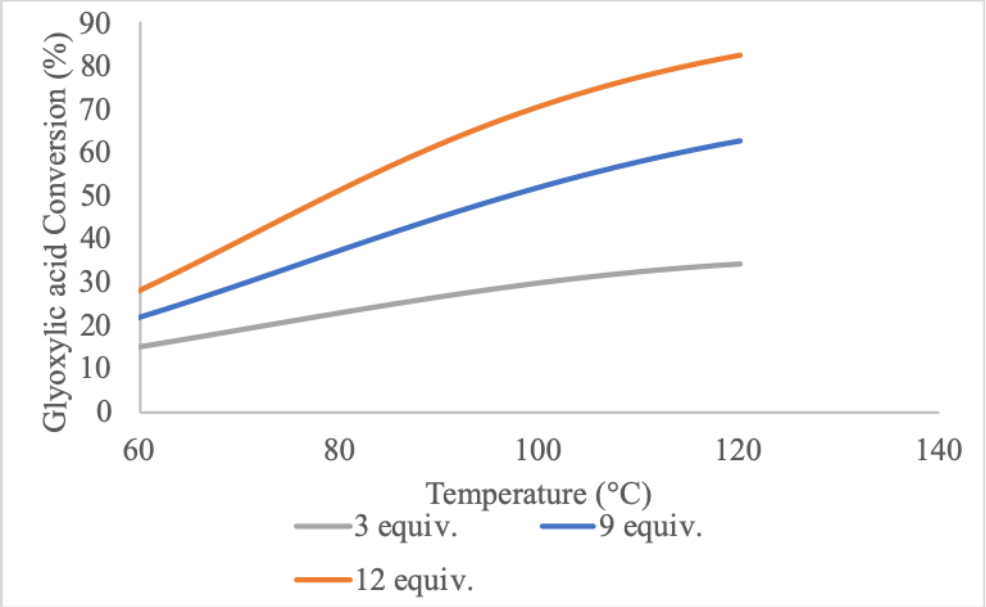

Figure 7. Profile plot on the effect of temperature and L-menthol equiv. at 0.5 min residence time on glyoxylic acid conversion.

 ©AUTHOR(S)

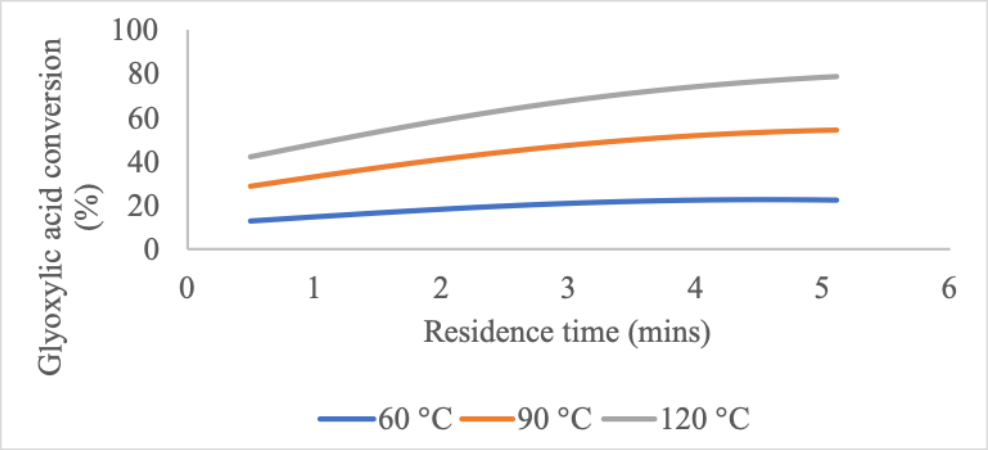

Figure 8. Profile plot on the effect of residence time and temperature using 6 equiv. L-menthol on glyoxylic acid conversion.

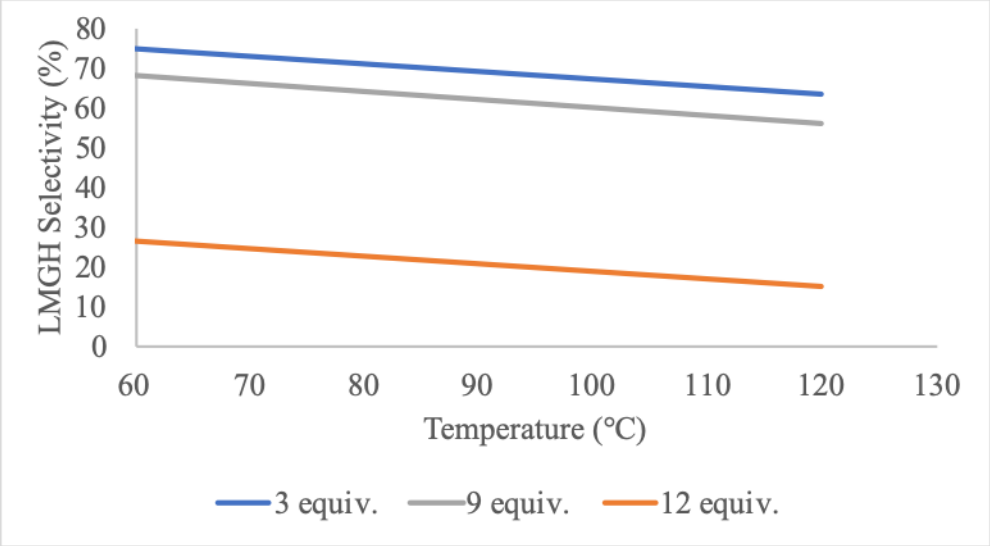

Figure 9. Profile plot on the effect of temperature and L-menthol equiv. at 0.5 min residence time on LMGH selectivity.

 ©AUTHOR(S)

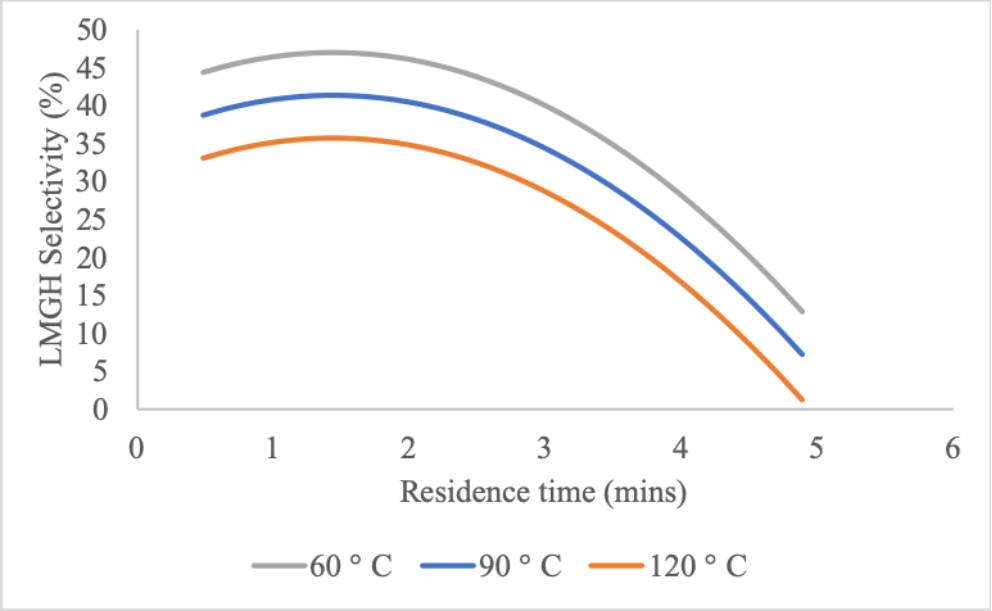

Figure 10. Profile plot on the effect of residence time and temperature using 6 equiv. L-menthol on LMGH selectivity.

As illustrated by the profile plots above, an increase in residence time, temperature and L-menthol **2** equiv. increases glyoxylic acid **3** conversion using Amberlyst-15 packed column reactor (Figure 7 and 8). Longer residence times, higher temperatures and excess L-menthol therefore favours the consumption of glyoxylic acid **3** affording esterification products as expected. Conversely, these high temperatures, longer residence times and excess L-menthol **2** proved to negatively affect LMGH **4** selectivity (Figure 9 and 10). This is consistent with the general observations from both the microwave-assisted flow reactor and Chemtrix 19.5 µL glass microreactor discussed earlier. Evidently, the esterification reaction in the FlowSyn system fitted with a column flow reactor, showed improvements in conversion and selectivity from those obtained in the Chemtrix Labtrix Start system and microwave-assisted reactor. This observation may be ascribed to the presence of molecular sieves that were incorporated together with Amberlyst-15 catalyst. The molecular sieves were replaced after 3 experimental runs to ensure that they are not used when they are saturated with water. The use of the heterogenous catalyst Amberlyst-15 may also have contributed to the increase in conversion as it was demonstrated under the batch reactions that Amberlyst-15 gave better results than *p*-TSA.[40,47]

According to Table 3 it can be noted that the highest selectivity of 92% was obtained in experiment 9; 7.5 eq. of **2**, at 90 °C and a residence time of 5.0 min, however this gave a poor glyoxylic acid conversion (32%). On the contrary, the experimental conditions (experiment 8; 10.2 eq. of **2**, at 108 °C and 0.5 min residence time) that gave the highest conversion 78% resulted in lowered LMGH selectivity (64%). In an effort to attain a reasonable balance between glyoxylic acid **3** conversion and LMGH **4** selectivity, the optimum conversion (68%) and selectivity (77%) were achieved at 80 °C and 2.5 min residence by using 6 equiv. L-menthol in a Amberlyst-15 packed column reactor.

 ©AUTHOR(S)

Conclusions

We demonstrated that LMGH **4** can be synthesised with relative success in continuous flow. One of the main challenges in LGMH **4** synthesis optimisation was that the optimum conditions for conversion gave a lower selectivity. As a result, we settled for a compromise between conversion and selectivity for optimum reaction conditions. There were several factors that were found to be pivotal in the optimisation of this reaction, namely the type of catalyst, mixing in the reactor, temperature and above all the ability to remove the water.

Experimental Section

General. Reagents were sourced from Sigma Aldrich and were used as supplied. Nuclear magnetic resonance (NMR) spectra were recorded at room temperature as solutions in deuterated chloroform ($CDCl_3$). A Bruker Avance-400 spectrometer (400 MHz) was used to record the spectra and the chemical shifts are reported in parts per million (ppm) with coupling constants in Hertz (Hz). Infra-red spectra were recorded from 4000 to 500 cm^{-1} using a Bruker spectrometer and peaks (v_{max}) reported in wavenumbers (cm^{-1}). Continuous flow reactions were performed on various systems were monitored by Agilent 1200 HPLC fitted with a diode array and Agilent 7890A Gas Chromatography (GC). HPLC analysis was performed on Agilent Zorbax C18-column (250 mm x 4.6 mm i.d, 5µm) at ambient temperature using an isocratic system. The mobile phase consisted of 70% acetonitrile and 30% water. Sample injection volume was 5 µl, eluted at a flow rate of 1 ml/min and detected at 194 nm with a run time of 16 min. GC analysis was performed on a ZB-5 MS capillary column of length 30 m and an internal diameter of 0.25 mm.

Continuous flow glyoxylic acid esterification in Chemtrix Labtrix Start flow system. A Chemtrix Labtrix Start system fitted with a 19.5 µl glass reactor was used to perform all solution phase esterification investigations. Two syringe pumps were used to pump reagents from two 10 ml SGE Luer lock gas tight glass syringes into the thermally controlled micro-reactor system, which was fitted with a 10-bar back pressure regulator. Glyoxylic acid **3** (0.1 M) and catalyst were both dissolved in acetonitrile and L-menthol **2** dissolved in acetonitrile prepared according to the mole equivalents under investigation were pumped into the flow system separately (Figure 2). The reagents were prepared at various mole ratios with glyoxylic acid as the limiting reagent and *p*-TSA (0.5% v/v) as the catalyst. Samples were collected and analysed using HPLC. LMGH **4** and the diester **5** were observed at the following retention times; 2.310 and 3.565 mins, respectively.

Microwave-assisted continuous flow glyoxylic acid esterification. The microwave-assisted continuous-flow reactor set-up was used in the study of the reaction fitted with a 10-bar back pressure regulator. Glyoxylic acid **3** (0.1 M) and L-menthol **2** (0.6 M) in acetonitrile were premixed and pumped into the reactor column packed with a mixture 2.0 g of Amberlyst-15 catalyst using an HPLC pump. The reactor temperatures were controlled by use of pre-installed WaveCraft software. Samples were collected and analysed by HPLC. The reactor was allowed to equilibrate between sample runs.

Continuous flow glyoxylic acid esterification in a packed column. A Uniqsis glass column reactor (1 cm ID x 10 cm) packed with Amberlyst-15 (4 g) and activated molecular sieves in the ratio 2:1 (5 cm bed height, 3,9 cm^3 reactor volume) was used. The column reactor was heated using the Uniqsis heating frame and the system was pressurised using a 10-bar back pressure regulator. Glyoxylic acid (0.1 M) and L-menthol **2** were both dissolved in acetonitrile were pumped into the column reactor using a peristaltic HPLC pump (Figure 6). The

 ©AUTHOR(S)

reagents were prepared at various mole ratios with glyoxylic acid as the limiting reagent. Samples were collected and analysed using HPLC.

L-Menthyl glyoxylate monohydrate (LMGH) 4. Solid: white powder with a melting point of 79 °C (Lit. value mp 77.0 – 79.0 °C). FT-IR (cm^{-1}) υ: 3420, 3345, 2959, 2873, 1738, 1455, 1219, 1095, 1030, 9556, 796. ^{1}H-NMR (400 MHz, DMSO) δ ppm: 0.72-0.70 (d, 3H), 0.89-0.84 (m; 7H), 1.06-0.94 (m; 2H), 1.47-1.35 (m; 2H), 1.65-1.62 (m, 2H), 1.87-1.84 (m, 2H), 4.64-4.57 (m, 1H), 4.97 (s; 1H), 6.59 (bs; 2H). ^{13}C-NMR (400 MHz, DMSO): δ ppm 170.6, 87.4, 73.9, 46.9, 34.1, 31.3, 25.9, 23.4, 22.3, 20.9, 16.2.

Acknowledgements

We thank the National Research Foundation and Nelson Mandela University for financial support.

Supplementary Material

Supplementary data associated with this article is available in the Supplementary Material.

References

1. Akwi, F.M.; Watts, P. *Chem Commun*. **2018**, *54*, 13894-13928. http://dx.doi.org/10.1039/c8cc07427e
2. Wiles, C.; Watts, P. *Green Chem*. **2014**, *16*, 55-62. http://dx.doi.org/10.1039/c3gc41797b
3. Watts, P.; Wiles, C. *J Chem Res*. **2012**, *181*, 181-193. https://doi.org/10.3184/174751912X13311365798808
4. Jas, G.; Kirschning, A. *Chem. Eur. J.* **2003**, 9, 5708-5723. http://dx.doi.org/10.1002/chem.200305212
5. Sharma, U. K.; Van der Eycken, E. V. *Flow Chemistry for the Synthesis of Heterocycles*. Maes, B.; Cossy, J., Polanc, S. Eds.; Springer: Paris, 2018; Vol. 56, p 343. http://dx.doi.org/10.1007/978-3-319-94328-2
6. Aziah Serri, N.; Kamaruddin, A. H.; Tau Len, K. Y. *Food Bioprod Process*. **2010**, *88*, 327-332. http://dx.doi.org/10.1016/j.fbp.2008.12.002
7. Mandala, D.; Watts, P.; *ChemistrySelect*, **2017**, *2*, 1102–1105. http://dx.doi.org/10.1002/slct.201700052
8. Kloimstein, E.; Hendel, W.; Reiter, K.; Burger, C.; Praus, A.; Giselbrecht, K. H.; Perndorfer, E. U.S. Patent 5 939 580, 1997, *Chem. Abstr.* **1999**, 19, 08/976,089.
9. Schouteeten, A. U. S. Patent 5 442 094, 1994; *Chem. Abstr.* **1995**, 19, 317381.
10. Ebeling, S. C.; Matthies, D. *J. für Prakt. Chemie*. **1994**, *336*, 632-633. https://doi.org/10.1002/prac.19943360317
11. Sajtos, A.; Zimmermann, C. Can. Pat. Appl. 2 353 854A1, 2000; *Chem. Abstr.* **2001**, 21, A 2173
12. Cook, P.; Keller, J.; Yang, X. U. S. Pat. 20040254395, 2003, *Chem. Abstr.* **2004**, 21, A 2173

 ©AUTHOR(S)

13. Macquarrie, D. Int. Appl. 1996022960A1, 1996, *Chem. Abstr.* **2004**, 19, 10/737 560
14. Fengjun, L.; Gang, Z.; Feifei, G.; Shigang, W.; Wengao, L.; Ronghua, W. China Pat. Appl. 102516078 A, 2011
15. Caibo, X.; Jinzong, Y.; Yan, W.; Shanhui, J.; Yaping, C.; Yaping, G. China Pat. Appl. 101274892A, 2011
16. Whitesell, J. K.; Lawrence R. M.; Chen, H. H. *J. Org. Chem.*, **1986**, *7*, 4779–4784. https://doi.org/10.1021/jo00375a006
17. Otera, J.; Nishikido, J. *Esterification: Methods, Reactions, and Applications*, 2nd edn., John Wiley & Sons, 2009; Vol. 2. pp 5-21.
18. Meher, L. C.; Sagar D. V.; Naik, S. N.; *Renew. Sustain. Energy Rev.* **2006**, *10*, 248–268. http://dx.doi.org/10.1016/j.rser.2004.09.002
19. Furuta, A.; Fukuyama, T.; Ryu, I. *Bull. Chem. Soc. Jpn.* **2017**, *90*, 607–612. http://dx.doi.org/10.1246/bcsj.20170025
20. Koo, H. M.; Lee, J. H.; Chang, T.S.; Suh, Y.W.; Lee D. H.; Bae J. W. *React. Kinet. Mech. Catal.*, **2014**, *112*, 499–510. https://doi.org/10.1007/s11144-014-0713-3
21. Kulkarni, A. A.; Zeyer, K.; Jacobs, T.; Kienle, A. *Ind. Eng. Chem. Res.* **2007**, *46*, 5271–5277. https://doi.org/10.1021/ie060411+
22. Wiles, C.; Ngamsom, B. *Chemtrix Application Note*, 2012, vol. 2. 1-3.
23. Wiles, C.; Watts, P.; Haswell, S. J.; Pombo-villar, E. *Tetrahedron*, **2003**, *59*, 10173–10179. http://dx.doi.org/10.1016/j.tet.2003.10.069
24. Kulkarni, M. G.; Gopinath, R.; Meher L. C.; Dalai, A. K. *Green Chem.* **2006**, *8*, 1056–1062. http://dx.doi.org/10.1039/b605713f
25. Khan, J. A.; Jamal, Y.; Shahid A.; Boulanger, B. O. *Korean J. Chem. Eng.* **2016**, *33*, 582–586. https://doi.org/10.1007/s11814-015-0192-x
26. Suryawanshi, M. A.; Shinde, N. H.; Nagotkar, R. V. *Int. J. Adv. Res. Sci. Eng. Technol.* **2014**, *1*, 17–26.
27. Teo H. T. R.; Saha, B. *J. Catal.*, **2004**, *228*, 174–182. https://doi.org/10.1016/j.jcat.2004.08.018
28. Yadav, G. D.; Mehta, P. H. *Ind. Eng. Chem. Res*, **1994**, *33*, 2198–2208. https://doi.org/10.1021/ie00033a025
29. Yang, Q.; Wang, X. J.; Li, Z.Y.; Sun, L.; You, Q. D. *Synth. Commun.* **2008**, *38*, 4107–4115. https://doi.org/10.1021/ie00033a025
30. Wegner, J.; Ceylan, S.; Kirschning, A. *Adv. Synth. Catal.* **2012**, **3***54*, 17–57. https://doi.org/10.1002/adsc.201100584
31. Gawande, M. B.; Shelke, S. N.; Zboril R.; Varma, R. S. *Acc. Chem. Res.* **2014**, *47*, 1338–1348. https://doi.org/10.1021/ar400309b
32. Pipus, G.; Plazl I.; Koloini, T. *Chem. Eng. J.* **2000**, *76*, 239–245. https://doi.org/10.1016/S1385-8947(99)00171-0
33. Nüchter, M.; Ondruschka, B.; Bonrath, W.; Gum, A. *Green Chem.* **2004**, *6***,** 128–141. https://doi.org/10.1039/B310502D
34. Porta, R.; Benaglia M.; Puglisi, A. *Org. Process Res. Dev.*, **2016**, *20*, 2–25. https://doi.org/10.1021/acs.oprd.5b00325
35. Mahajani, S. M. *React. Funct. Polym.* **2000**, *43*, 253–268. https://doi.org/10.1016/S1381-5148(99)00059-0
36. Izci, A.; Hosǵün, H. L. *Turkish J. Chem.*, **2007**, *31*, 493–499.
37. Minakawa, M.; Baek, H.; Yamada, Y. M. A.; Han, J. W.; Uozumi, Y. *Org. Lett.* 2013, **15**, 5798–5801.

 ©AUTHOR(S)

https://doi.org/10.1021/ol4028495
38. Mandala, D.; Watts, P. *ChemistrySelect*, **2017**, *2*, 1102–1105. https://doi.org/10.1002/slct.201700052
39. Manjare, M. S.; Deorukhkar, O. A.; Sathe, V. S. *J. Adv. Technol. Eng. Sci.* **2015**, *3,* 73–79.
40. Gangadwala, J.; Mankar, S.; Mahajani, S.; Kienle A.; Stein, E. *Ind. Eng. Chem. Res.* **2003**, *43,* 2146–2155. https://doi.org/10.1021/IE0204989
41. Mattioda, G.; Christidis, Y. *Ullmann's Encycl. Ind. Chem.* **2012**, *17*, 89–92. https://doi.org/10.1002/14356007.a12
42. Dai, C.; Snead, D. R.; Zhang, P.; Jamison, T. F. *J. Flow Chem*, **2015**, *5*, 133–138. https://doi.org/10.1556/1846.2015.00013
43. Wegner, J.; Ceylan, S.; Kirschning, A. *Adv. Synth. Catal.* **2012**, *354*, 17–57. https://doi.org/10.1002/adsc.201100584
44. Lidström, P.; Tierney, J.; Wathey B.; Westman, J. *Tetrahedron*, **2001**, *57*, 9225–9283. https://doi.org/10.1016/S0040-4020(01)00906-1
45. Baxendale, I.; Hayward J.; Ley, S. *Comb. Chem. High Throughput Screen.* **2007**, *10*, 802–836. http://dx.doi.org/10.2174/138620707783220374
46. Estel, L.; Poux, M.; Benamara N.; Polaert, I. *Chem. Eng. Process. - Process Intensif.*, **2017**, *113*, 56–64. http://dx.doi.org/10.1016/j.cep.2016.09.022
47 Meireles, B. A.; Pereira, *J. Braz. Chem. Soc.*, **2013**, *24*, 17–25. http://dx.doi.org/10.1590/S0103-50532013000100004

This paper is an open access article distributed under the terms of the Creative Commons Attribution (CC BY) license (http://creativecommons.org/licenses/by/4.0/)